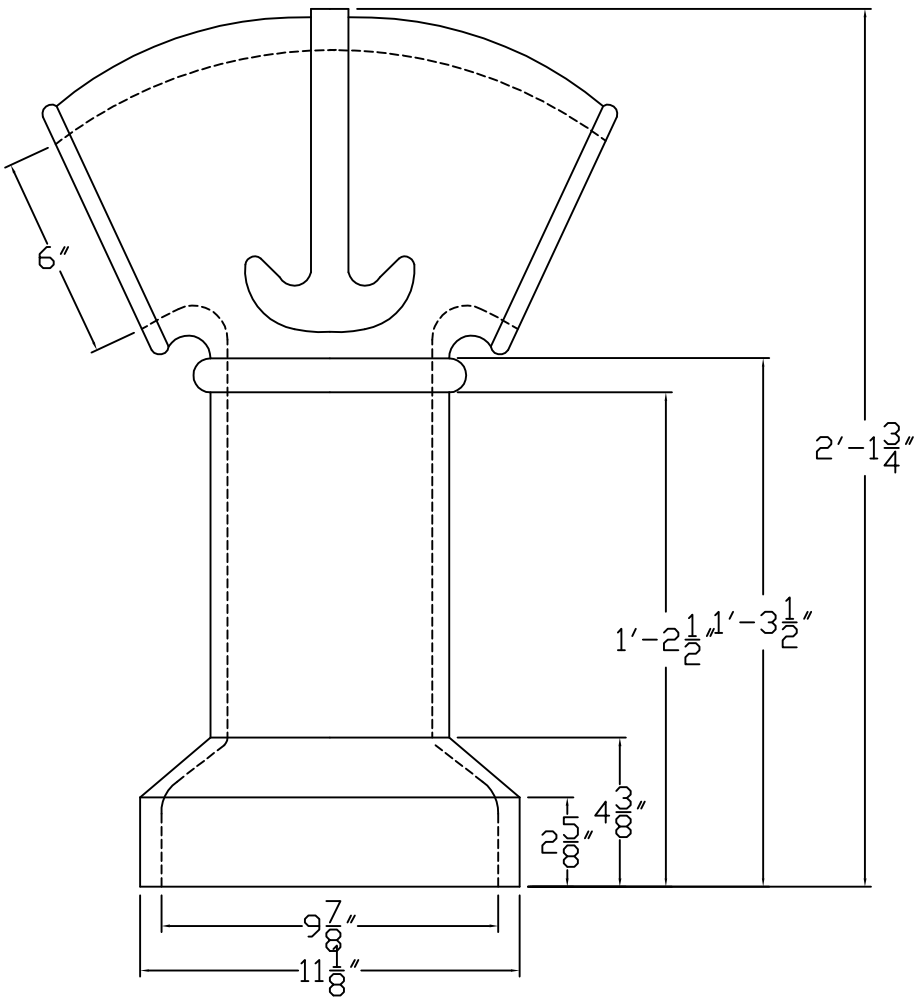

6″ Female Anchor Bonnet

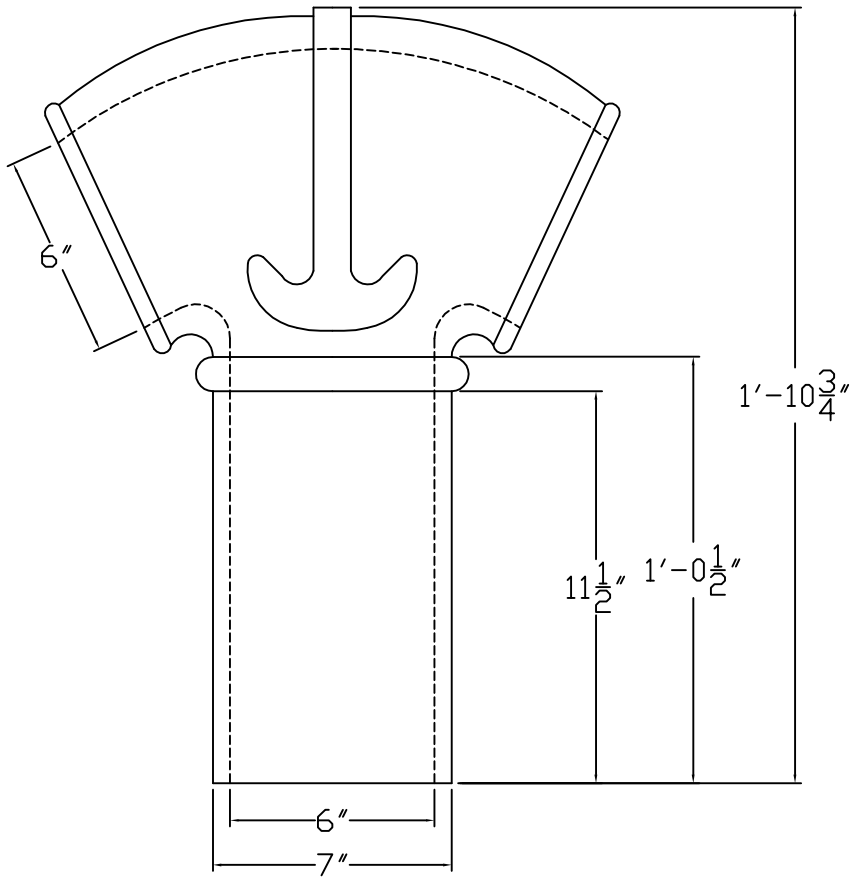

6″ Male Anchor Bonnet